THIS DRAWING CONTAINS INFORMATION PROPRIETARY TO RF INDUSTRIES,
ANY UNAUTHORIZED USE OF THIS DRAWING IS EXPRESSLY PROHIBITED
WITHOUT WRITTEN PERMISSION FROM RF INDUSTRIES.
ANY VIOLATION IS PUNISHABLE UNDER U.S. COPYRIGHT LAWS.

ALL DIMENSIONS ARE REFERENCE ONLY

PART NO. **RT-3000-1C**

REV	DESCRIPTION	DWN	DATE	APPROVED
–	ENGINEERING RELEASE	CZS	3/13/02	JDMc

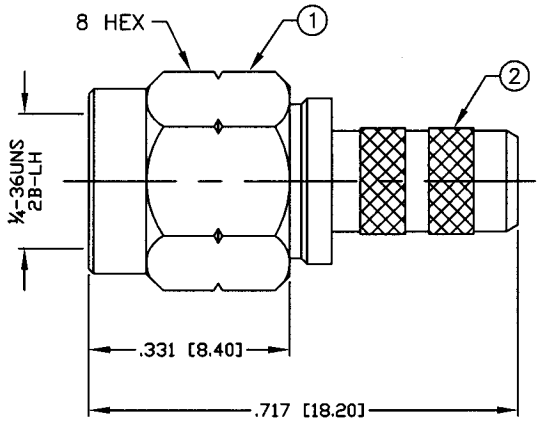

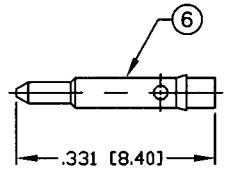

PIN TO BE SOLDERED

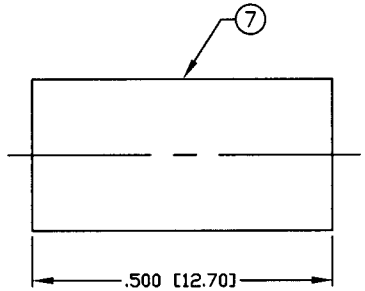

RECOMMENDED CRIMP DIE: .213"

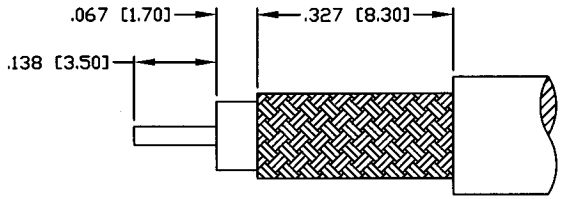

RECOMMENDED
STRIPPING DIMENSIONS

SPECIFICATIONS:

IMPEDANCE: 50 Ohms
FREQUENCY RANGE: 0–12.4 GHz
INSERTION LOSS(dB): 0.03 x $\sqrt{f(GHz)}$
VSWR: 1.3 MAX.
WORKING VOLTAGE: 500 V rms Max. @ Sea Level
INSULATION RESISTANCE: 5k M Ohms min.
TEMPERATURE RANGE: –65°C TO 85°C
FOR RG–58, 58A, 58C, 141, 141A, BELDEN 8240,
8262, 9201, 9203, 9310, 9311 & COMM/SCOPE 0268

#	DESCRIPTION	QTY	MATRL	FINISH
1	SHELL	1	BRASS	GOLD, 3μ"
2	BODY	1	BRASS	GOLD, 3μ"
3	INSULATOR	1	PTFE	---
4	RETAINING RING	1	Be–Cu	---
5	GASKET	1	SILICONE	---
6	PIN	1	BRASS	GOLD, 50μ"
7	FERRULE	1	BRASS	GOLD, 3μ"
8				
9				
10				
11				
12				
13				
14				

008974

APPROVALS	DATE
DRAWN C. ZUNIGA	3/13/02
CHECKED JDMc	3-13-02
ORJ DRAWN G. GALLEGOS	12/26/00

UNLESS OTHERWISE SPECIFIED:
1. REMOVE ALL BURRS
2. BREAK ALL CORNERS & EDGES .005 R. MAX.
3. CHAMFER 1ST & LAST THREADS 45°
4. SURFACE ROUGHNESS 63 FINISH MIL–STD–10
5. DIAMETERS ON COMMON CENTERS TO BE CONCENTRIC WITHIN .002 T.I.R.
6. ALL DIMENSIONS ARE AFTER PLATING.

DIMENSIONS ARE IN INCHES AND [MILLIMETERS]
UNLESS OTHERWISE NOTED TOLERANCES ARE:

DECIMALS	DIAMETER
.XXX±.003 [.08]	.XXX±.001 [.03]
.XX±.005 [.13]	.XX±.003 [.08]

RF connectors
DIVISION OF RF INDUSTRIES, LTD.
7610 MIRAMAR RD
SAN DIEGO,CA 92126
(858) 549–6340
(858) 549–6345 FAX

SMA PLUG, CRIMP

REVERSE THREADS

SIZE	CABLE GROUP	DWG NO.	REV
A	C	RT–3000–1C	—

SCALE: NTS | CAD FILE OUTLINE | SHEET 1 OF 1